turbofan

Turbofan Convection Oven

30 Series

Installation Manual

E32D4, E32D5

Electric Convection Oven

Digital Control



249556-6

October 2026

Effective: From Lot No. 2432000

CONTENTS

Preface
General information 2
Safety information 3
Warranty 4

Specifications
Dimensions 5
Product information 6
Supply requirements 6
Clearances 6
Electrical schematic 7

Installation and setup
Unpacking the oven 9
Assembling the oven 10
Positioning the oven 10
Levelling the oven 11
Connecting the water supply (if required) 12
Connecting the electrical supply 13
Adjustment and calibration 14

Parts
Main parts 15
Accessories 16

Commissioning checklist
Pre-installation 17
Installation 17
Operation 17

Appendix A: Reversing the door

General information

The drawings and diagrams in this manual are representative only and not to scale. They supplement the written instructions and specifications that they refer to.

Copyright

© 2026 Moffat Limited

IMPORTANT
The reproduction or copying of any part of this manual by any means whatsoever is strictly forbidden unless authorised previously in writing by Moffat Limited.

Warranty requirements

IMPORTANT
Installations must be carried out by a certified or licensed service person only. Failure to comply will void any written or implied warranty.

IMPORTANT
Unauthorised alterations to the oven may void warranties and approvals.

Intended use and restrictions

IMPORTANT
This oven is intended for commercial use only, in kitchens of restaurants, canteens, and so on. It is not intended to be used as follows:

- In residential, outdoor, marine environments, or for the continuous mass-production of food.
- By persons with limited physical, sensory, or mental abilities.
- By persons who are not adequately trained in the operation and use of the oven.
- By children.

- This oven must only be used by operators who are adequately trained in the purpose, limitations, and hazards of its operation. To avoid the risk of accidents or damage, operators should be regularly trained.

Product disposal

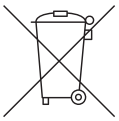

This symbol on the oven indicates that this oven should not be treated as domestic or regular commercial waste, but must be correctly disposed of in order to prevent any negative consequences for the environment and human health. For further information on the recycling of this oven, contact your local city office or your waste disposal service.

The owner and operator are responsible for the proper and safe disposal of the oven.

Safety information

Read the safety messages in this manual and follow the instructions carefully. Review them frequently.

Safety messages cannot cover every potential cause of injury or equipment damage but can highlight common causes of hazards. Read and understand all instructions in this manual prior to installing or servicing the oven and seek advice before operating the oven in a manner other than that described in this manual. Consult your authorised service technician before performing maintenance.

- Ensure that you and all users of this oven understand every safety message.
- Know and observe all safety rules that may apply to your work situation and your work site.
- Replace the user manuals and safety labels immediately if they are missing or damaged.

Recognize safety information



Safety alert symbol.

When you see this symbol in the manual or on the oven, pay special attention to the instructions.



Read the instructions before using the oven.



Risk of electric shock.



Risk of burns–hot surface.



Equipotential bonding terminal–must be connected to equipotential bonding system.



Risk of burns–hot liquid products above height level.

This manual uses the following safety symbols to indicate the level of caution required when using the oven.

⚠DANGER

Indicates an imminently hazardous situation that, if not avoided, will result in death or serious injury.

⚠WARNING

Indicates a potentially hazardous situation that, if not avoided, could result in death or serious injury.

⚠CAUTION

Indicates a hazardous situation that, if not avoided, could result in minor or moderate injury.

NOTICE

Indicates information considered important, but not hazard-related (for example, messages relating to property damage).

General safety

⚠WARNING

Improper installation, adjustment, alteration, service, or maintenance can cause property damage, injury, or death. Read the installation, operation, and maintenance instructions thoroughly before installing or servicing this oven.

⚠DANGER

Fire hazard. Do not use or store flammable materials in or near this oven. Do not spray aerosols in the vicinity of this oven while it is in operation.

⚠WARNING

Fire hazard. The oven operator shall take great care to use the oven safely and guard against risk of fire. The oven must not be left unattended during use.

NOTICE

The oven shall be regularly inspected by a competent service person to ensure that it is in safe and correct order for operation.

⚠CAUTION

Do not operate this oven without the supplied legs fitted to it.

Warranty

Moffat warrants all equipment supplied by Moffat against defects in material and workmanship.

Visit www.moffat.com for warranty terms and conditions or contact our Customer Care team.

© 2026 Moffat | 249556-6

SPECIFICATIONS

Dimensions

All dimensions are in mm (inches).

Air vent Electrical supply entry point Water supply entry point

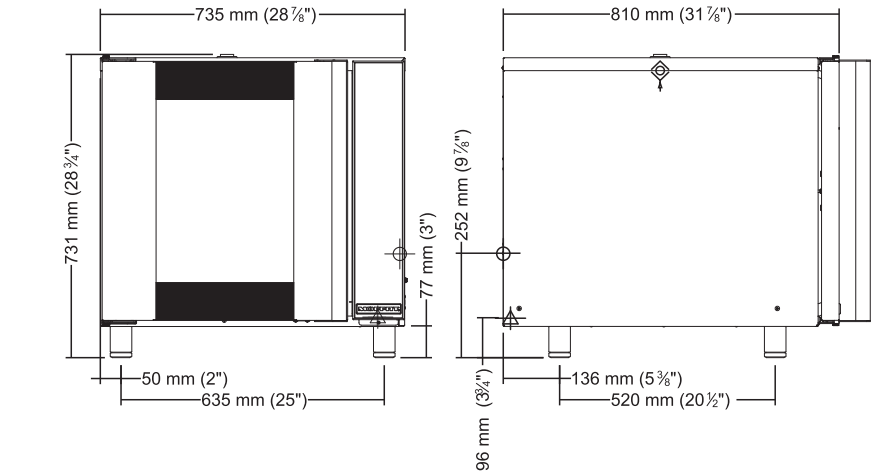

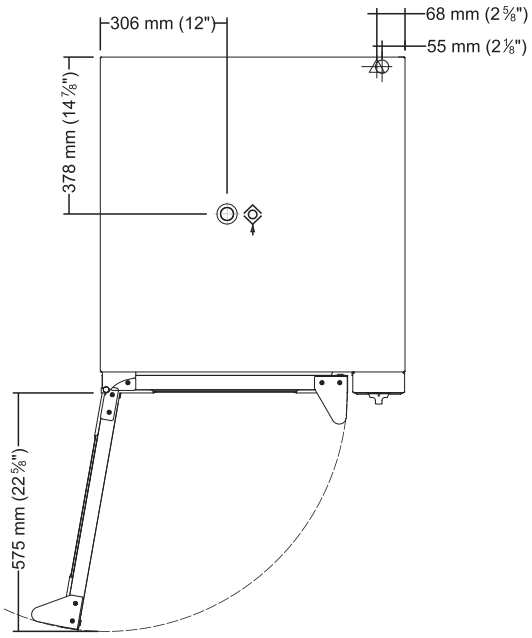

Product information

	E32D4	E32D5
Region	NOT FOR USA / CANADA / MEXICO	FOR USA / CANADA / MEXICO
Capacity	4 shelves	5 shelves
Tray capacity	460 x 660 mm (18 x 26 inches) full-size sheet pan capacity 600 x 400 tray capacity US full pan	460 x 660 mm (18 x 26 inches) full-size sheet pan capacity 600 x 400 tray capacity US full pan
Tray spacing	110 mm (4 ⅜ inches)	85 mm (3 ⅓ inches)
Net Weight	98 kg	100 kg

Supply requirements

Electrical supply

	E32D4	E32D5
Region	NOT FOR USA / CANADA / MEXICO	FOR USA / CANADA / MEXICO
Electrical Supply Specifications	208-220 V, 50/60 Hz, 6.5 kW 230 -240V, 50/60 Hz, 6.5 kW 380 V, 50 Hz, 3P+N+E, 6.5 kW	208 V, 50/60 Hz, 6.5 kW 220-240 V, 50/60 Hz, 6.5 kW

Electrical connection requirements

- An isolation switch must be mounted adjacent to, but not behind the oven and must be readily accessible to the operator. This switch must be clearly marked and readily accessible in case of fire.
- The branch supply line shall be individually overload protected to the correct current rating and the supply cord shall be protected against any mechanical or thermal damage.
- All wiring connections must be tight.
- The size of the cable supply to the oven shall be appropriate for the current drawn on the line. Refer to the appropriate wiring standards for the cable size required.
- A RCD (Residual Current Device) / GFCI (Ground-Fault Circuit Interrupter) is recommended for protection of the power supply to this oven.

Water supply

Maximum Water inlet Pressure	80 psi (550 kPa)
Connection size	¾ inch BSP male (with ¾ inch GHT adaptor included)
Water quality	
Hardness	60-90 ppm
PH	Greater than 7.5
Chlorides	Less than 30 mm

Clearances

Position the oven with the following minimum clearances:

Top	200 mm (8 inches)
Left	50 mm (2 inches)*
Right	75 mm (3 inches)*†
Rear	50 mm (2 inches)
Front (recommended)	600 mm (23 inches)*

* Door-side clearance. If the oven is fitted with a right-hand side door (RMD), swap the left- and right-hand side clearances.

† Fixed installations require at least 500 mm (20 inches) clearance on right-hand side of the oven for service access.
Do not place the oven close to a heat source. A minimum distance of 300 mm (12 inches) from the appliance sides and the heat source is required.

© 2026 Moffat | 249556-6

Electrical schematic

200-240 V

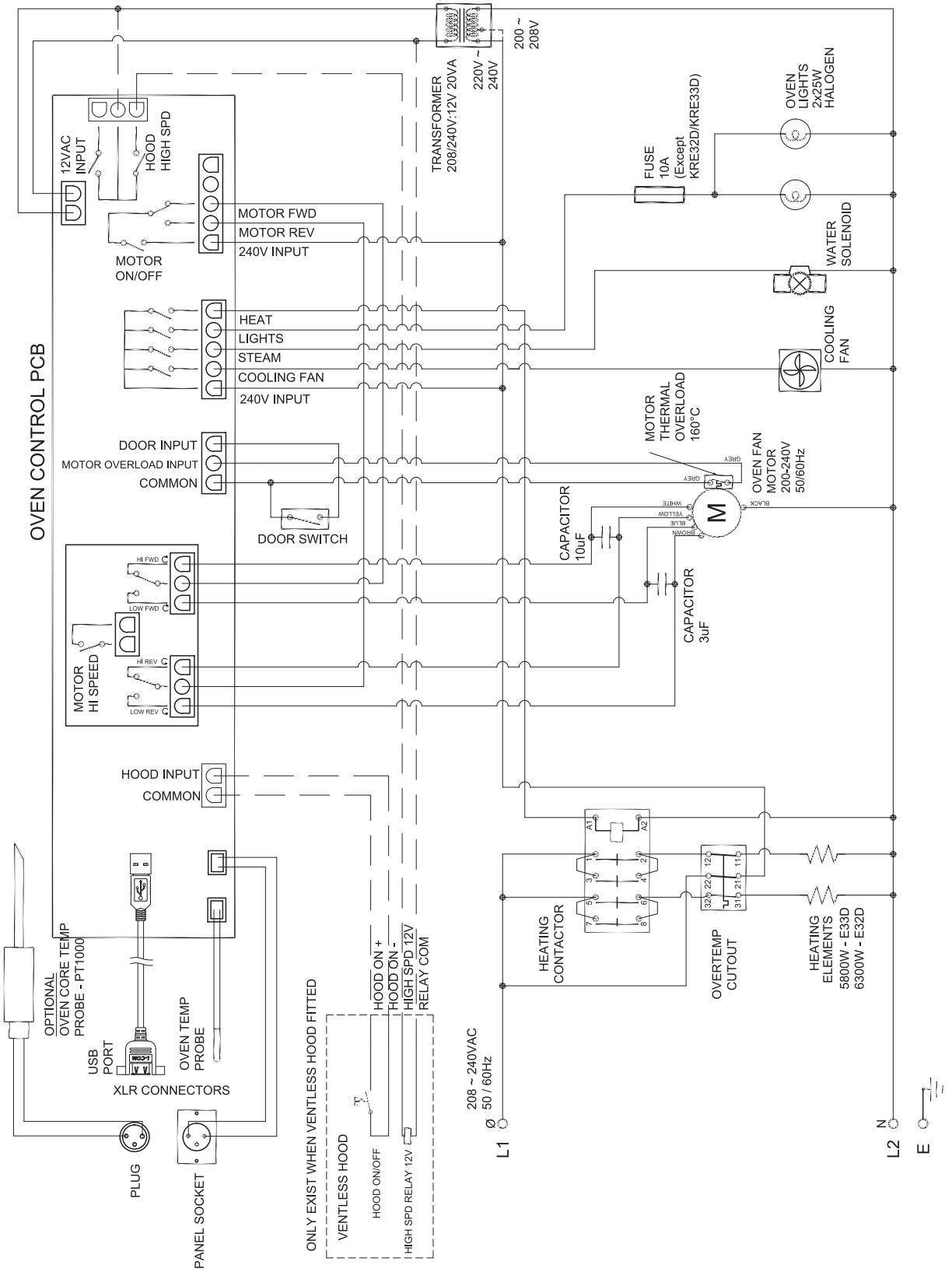

380-415V

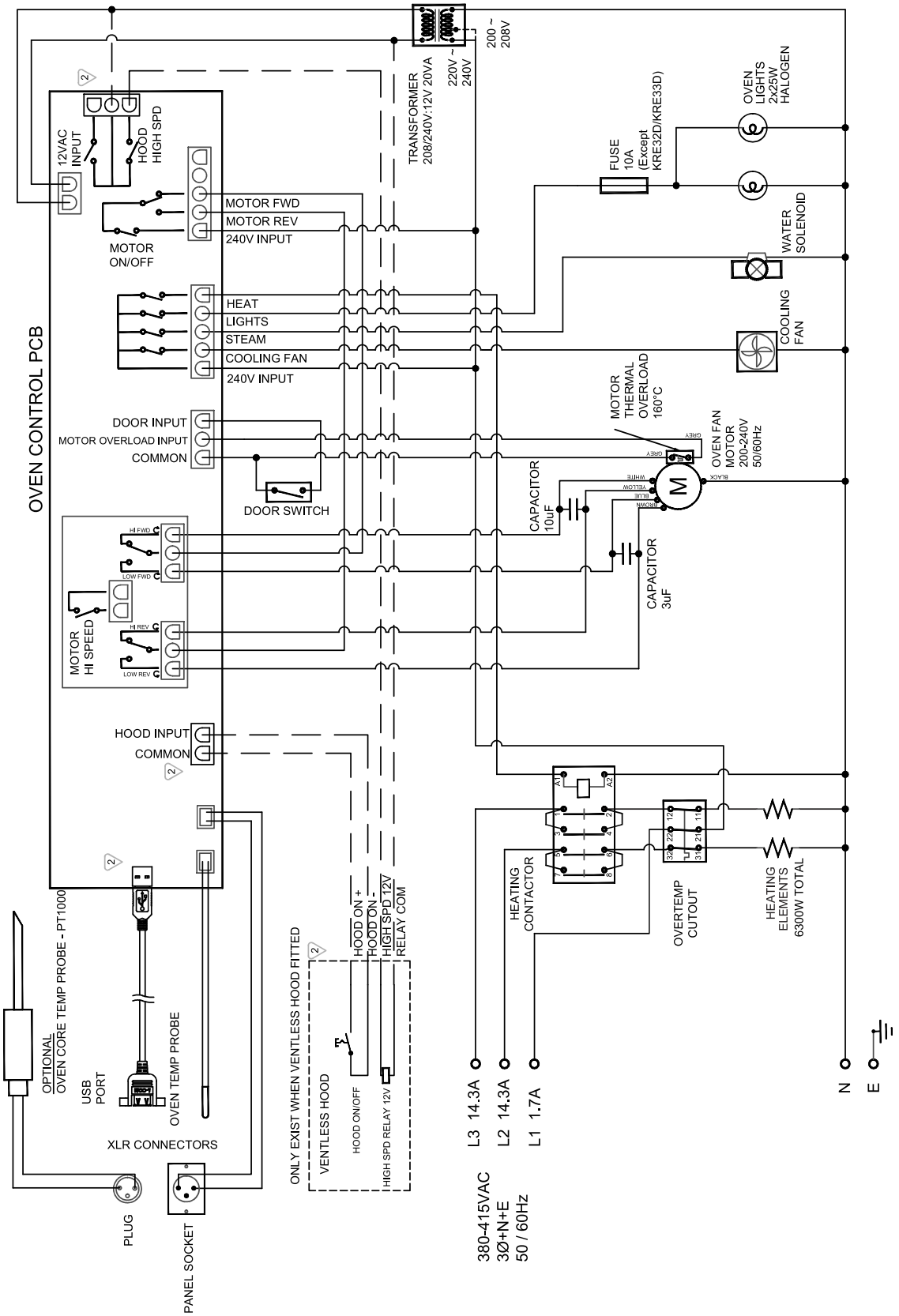

© 2026 Moffat | 249556-6

INSTALLATION AND SETUP

Your oven is designed to provide years of satisfactory service, and correct installation is essential for the best performance, efficiency, and trouble-free operation. It is of utmost importance that this oven is installed correctly and that operation is correct before use.

Complete the commissioning checklist in this manual before commissioning the oven.

⚠WARNING

Installations must be carried out by qualified service persons only. Failure to install equipment to the relevant codes and the manufacturer's specifications in this manual will void the warranty.

⚠WARNING

The oven installation must conform to national installation codes and local and national codes for fire safety.

Australia and New Zealand

United Kingdom
BS 6173 Installation of Catering Appliances.
BS 5440 1 & 2 Installation Flueing & Ventilation.

US and Canada

NOTICE

The oven installation must conform to national installation codes and local and national codes for plumbing and drainage.

Australia and New Zealand
AS/NZS 3500 Plumbing & Drainage.

Europe
EN 1717 Protections of water installations.

Unpacking the oven

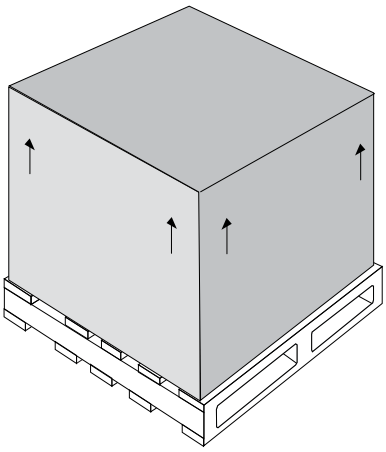

1. Carefully remove all packaging and transit protection from the oven including all protective plastic coating from the exterior stainless steel panels.
   Do not discard the carton and other packaging material until you have inspected the appliance for transit damage and have tested it for proper operation.
2. Remove the protective film from the stainless steel panels, taking care not to scratch the surface if using a blade or shim.

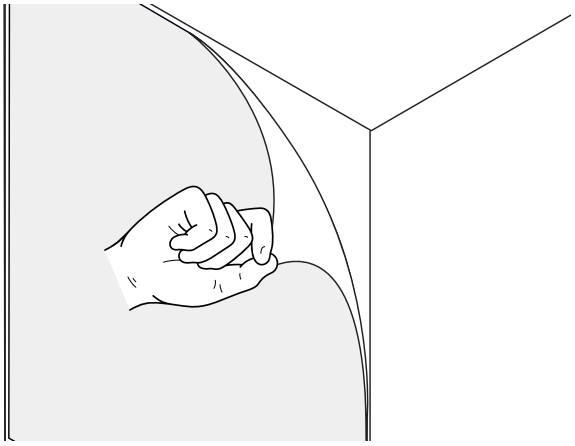

3. Check equipment and parts for damage. Report any damage immediately to carrier and distributor.
4. Check that the supply specifications on the rating plate are correct for your location and installation requirements.
5. Check that all parts are supplied with the product. See Parts on page 15.

Assembling the oven

Fit the legs

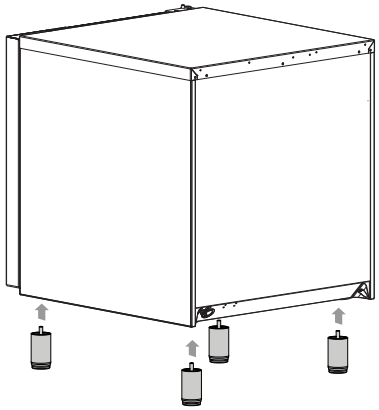

Positioning the oven

NOTICE

This oven is intended to be installed on an elevated work surface, such as a bench top or onto the SK32 stand.

⚠CAUTION

Position the oven so that the control panel and oven cooking area is easily reachable for loading and unloading.

NOTICE

Do not place the oven close to a heat source.

A minimum distance of 300 mm (12 inches) from the appliance sides and the heat source is required.

⚠WARNING

Do not block or obstruct the vent at the top of the oven.

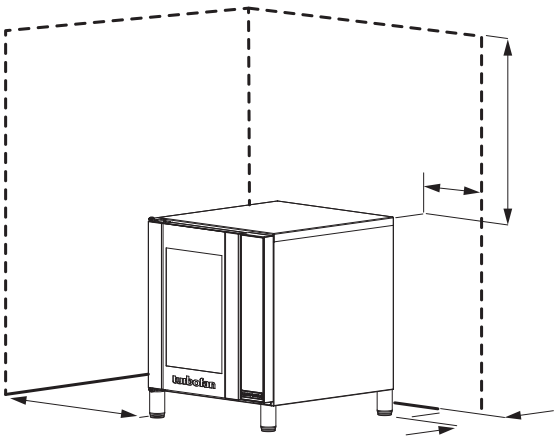

Clearances

Position the oven with the following minimum clearances:

Top	200 mm (8 inches)
Left	50 mm (2 inches)*
Right	75 mm (3 inches)*†
Rear	50 mm (2 inches)
Front (recommended)	600 mm (23 inches)*

* Door-side clearance. If the oven is fitted with a right-hand side door (RMD), swap the left- and right-hand side clearances.

† Fixed installations require at least 500 mm (20 inches) clearance on right-hand side of the oven for service access. Do not place the oven close to a heat source. A minimum distance of 300 mm (12 inches) from the appliance sides and the heat source is required.

© 2026 Moffat | 249556-6

Positioning the oven on a work surface

⚠CAUTION

When the oven is installed on an elevated work surface, there is a risk of burns from hot food and hot food containers if the food containers tip out of shelves that are above eye-level.

Always load liquids, or foods that can liquefy when heated, at eye-level where they can be seen.

Once the oven is correctly installed on the work surface, stick the necessary warning label to the left-hand side of the oven door as follows:

1. Locate the area for installation of the warning label that is at 1.6 m (63 inches) above the floor on the hinge-side of the door of the oven.
2. Clean the area thoroughly of oils and grease.
3. Obtain the appropriate warning label supplied and stick it to the door.

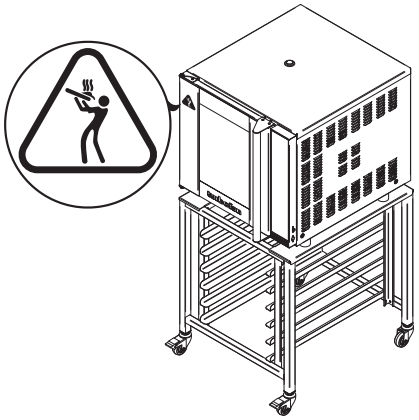

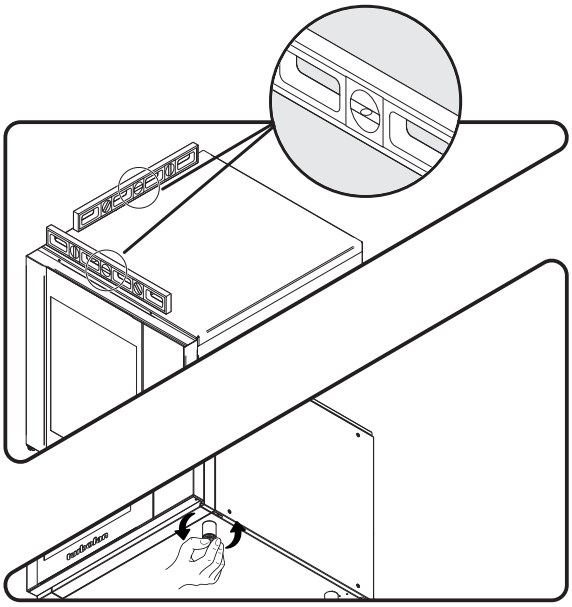

Levelling the oven

Correctly locate the oven into its final operating position and, using a spirit level, adjust the oven feet so that the oven is level and at the correct height.

Connecting the water supply (if required)

To activate steam-assisted cooking or baking for this oven it must be permanently connected to the mains water supply.

NOTICE

Water connection shall be installed in accordance with local water regulations in force and the applicable standard or code (for example, PCA in Australia, EN 1717 in UK / IE, and so on).

NOTICE

The water supply shall meet the requirements for use in Convection Oven systems. See Supply requirements on page 6.

1. Tighten the two screws securing the water connection at the rear of oven.
   The securing screws are unfastened during manufacture to prevent damage to the water connection during transit.

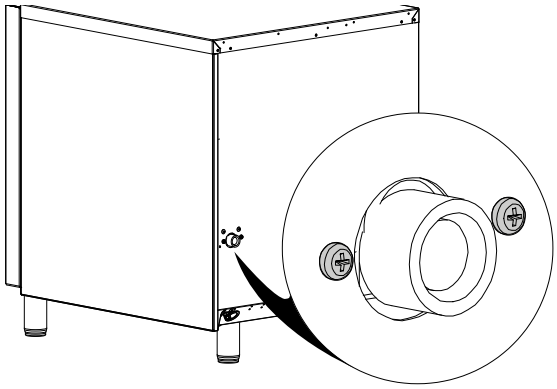

2. (USA / Canada / Mexico only) Fit the supplied ¾ inch GHT adapter and washer to the water inlet.

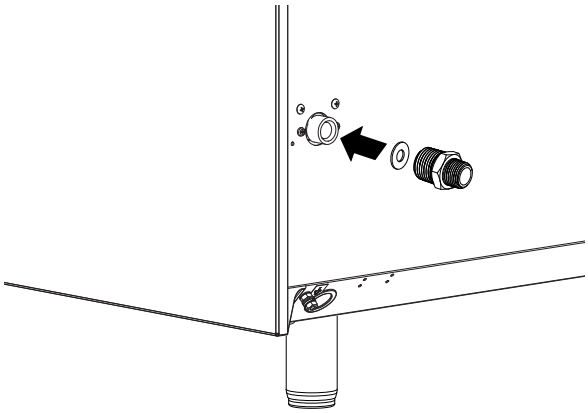

3. Connect a cold water supply (R ¾ inch connector) to the water connection on the oven.
4. Turn on the water supply and check for leaks.

© 2026 Moffat | 249556-6

Connecting the electrical supply

Ensure that you meet the electrical connection requirements. See Electrical connection requirements on page 6

⚠WARNING

All electrical connections must only be carried out by a suitably qualified person.

⚠WARNING

The oven must be earthed (grounded).

⚠WARNING

If the power supply cord is damaged, it must be replaced by a suitably qualified person in order to avoid a hazard.

NOTICE

Each oven should be connected to an adequately protected power supply with an appropriate power cord.

- Check that the electricity supply is correct as shown on the oven's rating plate.
- Ensure that a cable gland is fitted around the wiring entry hole into the oven.

Electrical supply connection

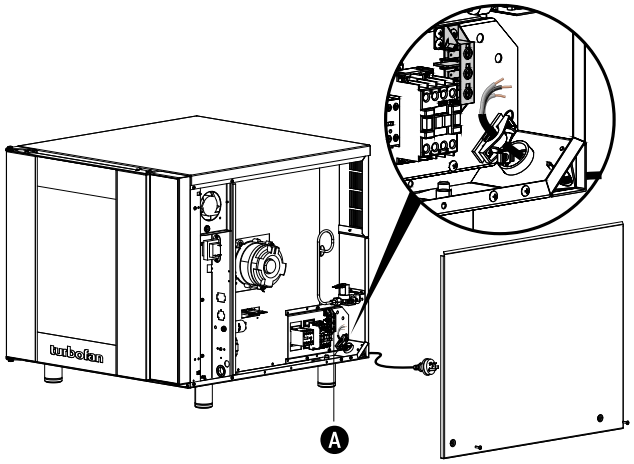

1. Remove oven right hand side panel.
2. Bring the supply cable through the compression gland at the back of oven.
3. Connect the mains supply to the appropriately marked terminals on the terminal block (A).
4. Connect supply plug to mains outlet.
5. Turn on the mains supply and ensure that the controller is powered-up.

Terminal block wiring connection

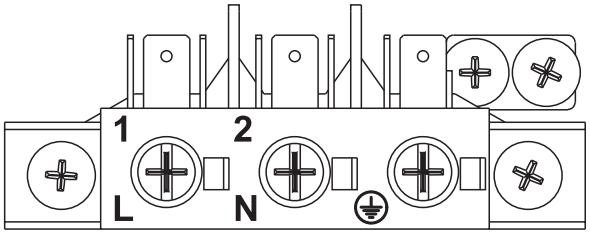

Adjustment and calibration

Adjusting the door

Align the door with the chassis

A correctly aligned door has a nominal gap of 6mm from the edge of the door to the side of the control panel.

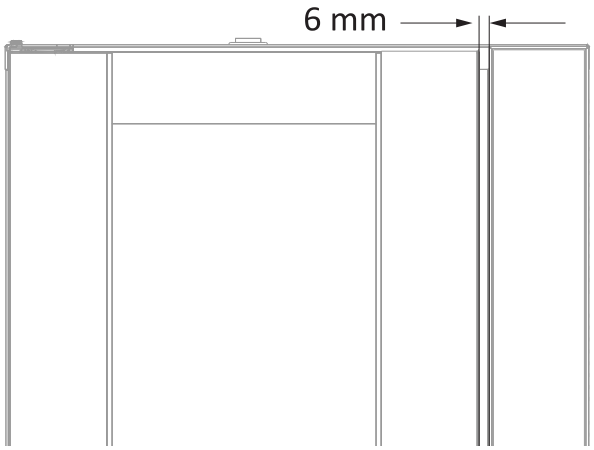

1. Loosen the screws from the upper and lower hinge plates.
2. Adjust the position of the door horizontally and vertically until the door is correctly aligned.
3. Fasten the screws at the hinge plates and ensure that the door closes correctly.

Adjust the door catch

To check that the door seals correctly when it is closed:

1. Place a sheet of paper between the door and the seal.
2. Close the door on the paper and attempt to withdraw the paper by firmly tugging on the paper.

   The paper should just pull out with some resistance but without tearing.

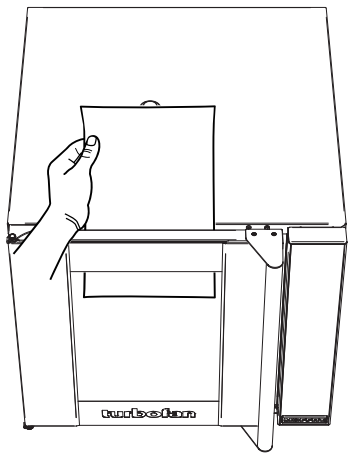

To adjust the door catch:

- If the paper withdraws easily, screw the door catch in by a ½ turn and repeat the test above until the door is adjusted correctly.
- If the paper cannot be withdrawn and the door springs open, screw the door catch out by a ½ turn and repeat the test above until adjusted correctly.

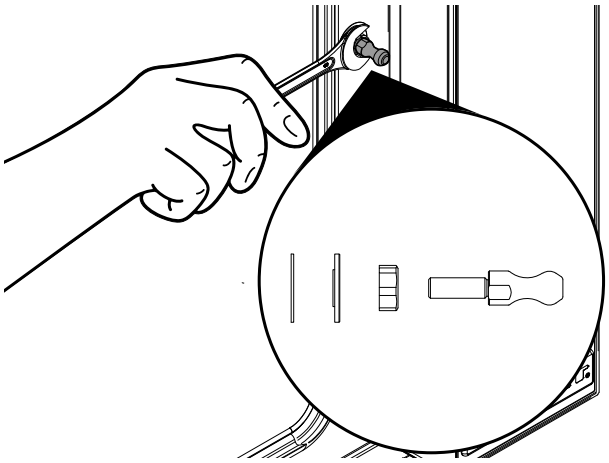

Adjusting the door micro-switch

1. Remove the control panel.
2. Bend the micro-switch arm to adjust the micro-switch operation.
3. Open and close the oven door and check that the micro-switch operates correctly.

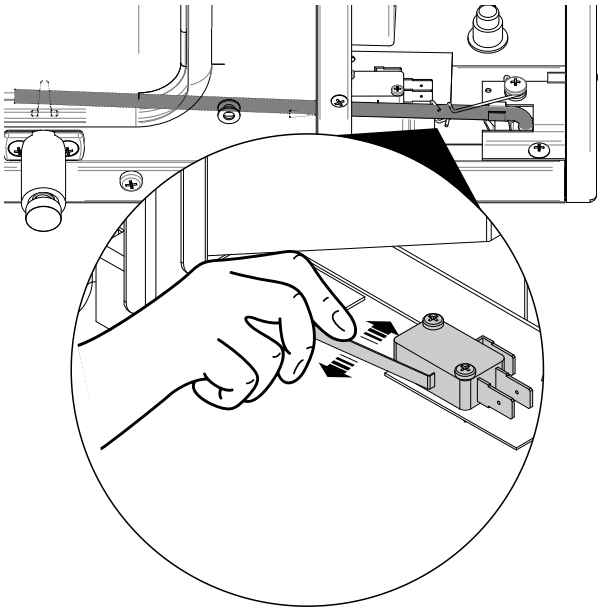

© 2026 Moffat | 249556-6

PARTS

Main parts

Supplied parts (fitted)

These accessories are supplied fitted with your oven, depending on your oven model and region.

	Part No.	Description	Quantity	Region
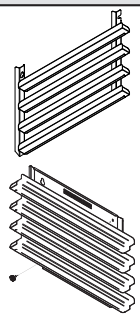	234658	Side Rack LH 5 Tray	1	FOR USA / CANADA / MEXICO
	234659	Side Rack RH 5 Tray	1	
	234656	Side Rack LH 4 Tray	1	NOT FOR USA / CANADA / MEXICO
	234657	Side Rack RH 4 Tray	1	
	238410	Side Rack LH 4 Tray (400 x 600)	1	
	238411	Side Rack RH 4 Tray (400 x 600)	1	
	235260	Side Rack LH 5 Tray GN	1	
	235263	Side Rack RH 5 Tray GN	1	
	234660	Side Rack LH 3 Tray	1	
	234663	Side Rack RH 3 Tray	1	
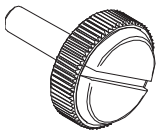	233552	Thumbscrew (for side rack)	1	
-	235262	Fan Baffle for GN Racks (not shown)	1	

Supplied parts (unfitted)

These accessories are supplied unfitted with your oven. See Assembling the oven on page 10.

	Part No.	Description	Quantity
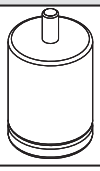	232379	Adjustable Leg 3 inches (76 mm)	4
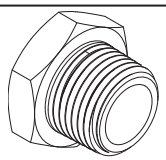	025922	¾ inch GHT Adapter (USA / Canada / Mexico only)	1
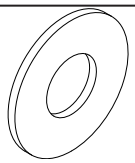	021527	Washer for GHT Adapter (USA / Canada / Mexico only)	1

Supplied parts (optional)

These accessories may be optionally supplied, unfitted, with your oven.

	Part No.	Description	Quantity
	233649	Rack	4 (or 5)

Accessories

Accessories (add-on)

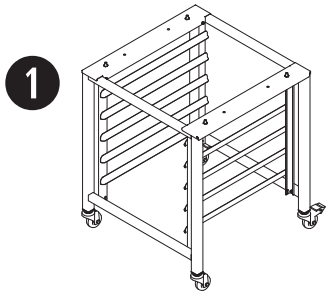

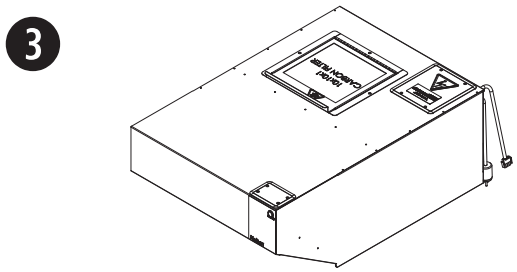

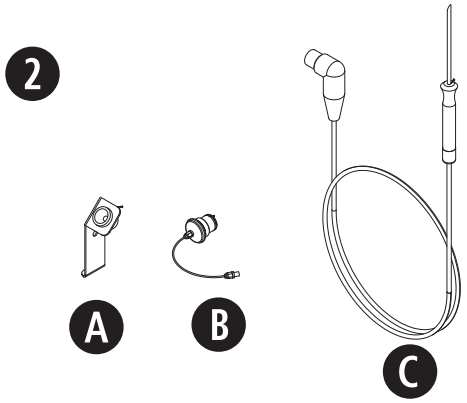

	Part No.	Description
1	SK32	Stand
2	236060	Core Temperature Probe Kit
3	–	Ventless Hood
Not shown	DSKE32C	Double Stacking kit - Fitted With Castors
Not shown	DSKE32	Double Stacking kit - Fitted With Adjustable Feet

© 2026 Moffat | 249556-6

COMMISSIONING CHECKLIST

Before leaving the new installation, check that the oven functions in accordance with the operating instructions in this manual. Complete the following checklist.

If the oven does not operate correctly, turn off the oven, disconnect the power supply at the mains and contact the supplier of this oven.

Date _____

Installer _____

Pre-installation

- ☐ Delivered intact with all parts and accessories.
- ☐ No noticeable damage to the interior or exterior of the oven.

Installation

■ Positioning and fitting
- ☐ Adequate separation and/or isolation from other appliances and/or heat sources.
- ☐ Adequate ventilation in installation area.
- ☐ The oven is level with respect to the floor.

■ Electrical connection
- ☐ Adequate supply voltage.
- ☐ Correctly grounded outlet.
- ☐ Correct current draw and loading.

■ Water connection
- ☐ Adequate water supply pressure.
- ☐ Water supply quality meets requirements.
- ☐ Correctly sized water connector.

■ Water pipework
- ☐ All water pipework has been thoroughly flushed after installation.

■ General
- ☐ Correct door alignment
- ☐ All removable panels and receptacles have been refitted.

■ First use

⚠CAUTION

Ensure that all packaging material has been removed from the oven before operation.

- ☐ Operate the oven for about one hour at 200 °C (400 °F) to remove any fumes or odours which may be present.

If the oven does not start on initial start-up, check that the over-temperature thermostat has not tripped during transit. Remove the side panel on the controller-side of the oven and press the over-temperature thermostat reset button.

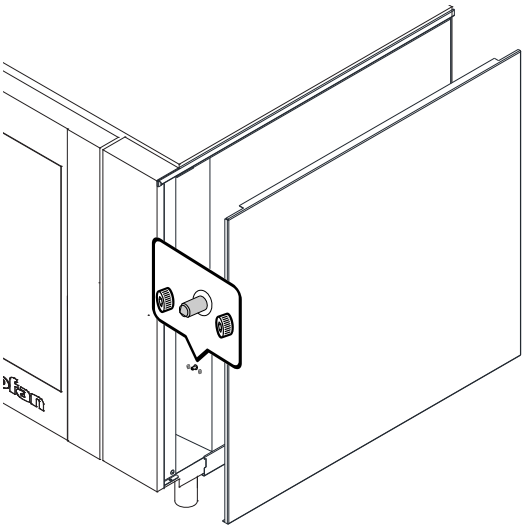

Operation

■ Functionality
- ☐ The oven lights work.
- ☐ Thermostat functions correctly.
  - ☐ Check that the oven stops heating when it reaches the set temperature.
- ☐ The oven controller operates correctly.
- ☐ The door sensors function correctly.
  - ☐ With the oven operating at a set temperature, open the door and check that the oven stops heating and the heating fan is off.

- ☐ Open the oven door and ensure that the controller displays dor; close the door and ensure that the controller returns to normal operation.
- ☐ The oven heats to the set temperature.
  - ☐ Check that the oven set temperature matches the actual temperature.
- ☐ The heating fan operates correctly.
- ☐ The oven door seals correctly.
- ☐ The oven door is correctly aligned.

■ Operational readiness

- ☐ All connections are correct and all covers are fitted.
- ☐ The drain extension is retained with the oven.

■ Operator training

- ☐ The operator has been instructed in correct operation and safe shutdown of the oven.

© 2026 Moffat | 249556-6

REVERSING THE DOOR

You can reverse the door orientation so that it opens from the right-hand side instead of the left-hand side of the oven.

Remove the door inner glass.

1. Open the inner glass door.

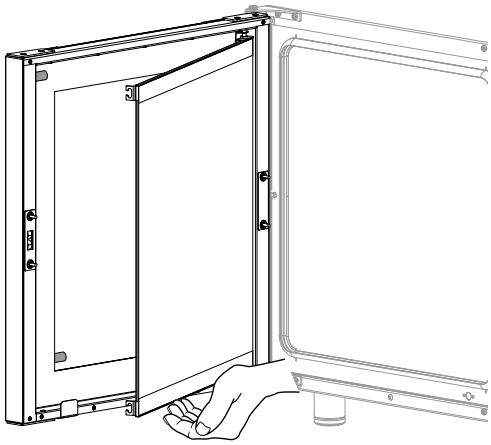

2. Remove the screw securing the inner glass retaining clip and remove the clip (A).

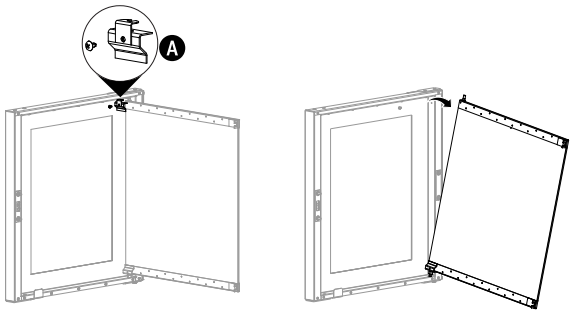

3. Tilt back and remove the inner glass door.

Remove the door.

1. Support the door and use a wrench to unfasten and remove the bolts from the top and bottom hinges. Retaining the pivot bolt (A), washer (B), and pivot brush (C).

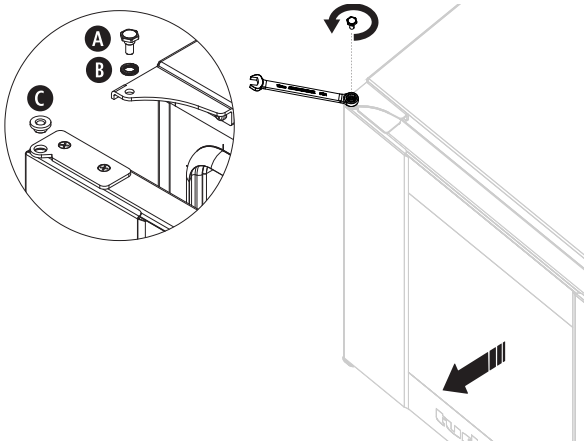

2. Lift the door off the bottom hinge.
3. Gently tap the hinge pivot bushes (C) from the top and bottom of the door to remove them.
4. Remove the door and lay it on a flat surface or workbench.

Remove the door hinges.

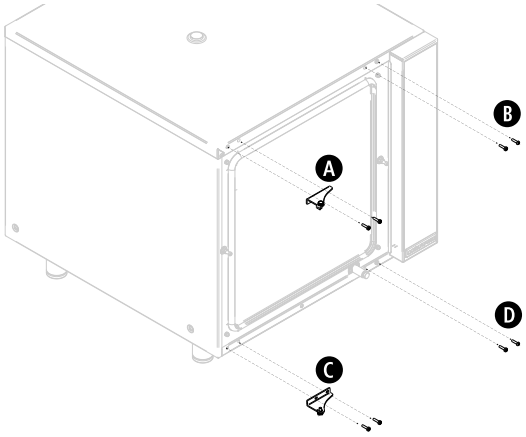

1. Remove the two screws that secure the top hinge bracket (A)to the oven.
2. Remove the top hinge.
3. Remove the two screws that secure the bottom bracket (C) and remove the bracket.
4. Remove the blanking screws (B, D) from the opposite side of the door opening.

   The door hinge assembly is available as complete door hinge replacement kit or as

bolt, washer, and pivot bush.

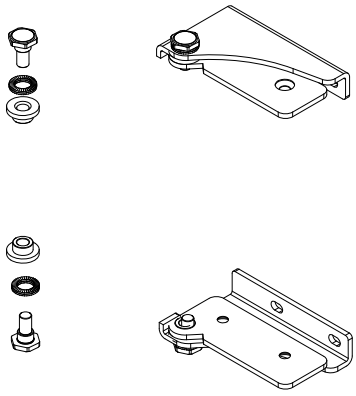

Fit the door hinges to the opposite side.

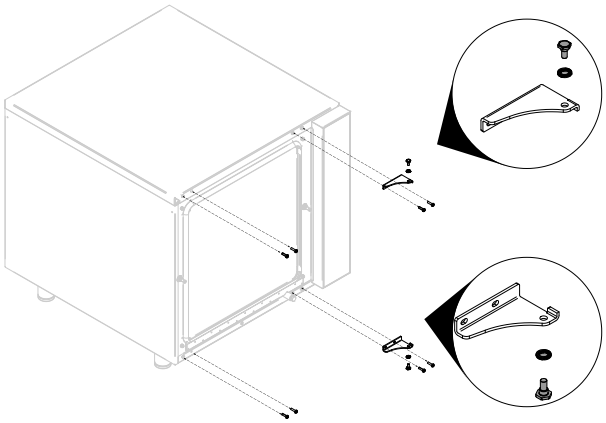

1. Fit the blanking screws from the opposite side of the door opening to where the hinge brackets were removed.
2. Turn the top hinge bracket over 180°.
3. Fit the top hinge bracket to the bottom right-hand side of the door opening and secure it with the two screws and washers.
4. Turn the bottom hinge bracket over 180°.
5. Fit the bottom hinge bracket to the top right-hand-side of the door opening and secure it with the two screws and washers.

Reverse the door parts.

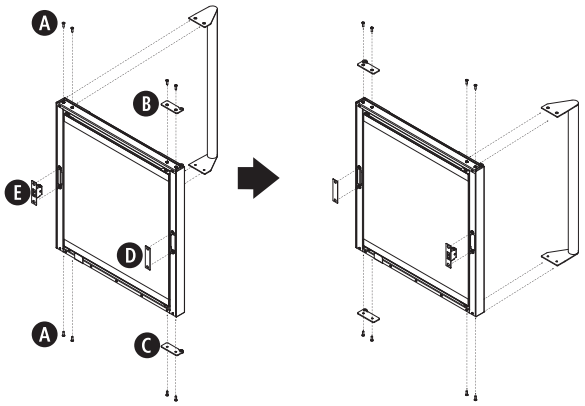

1. Unfasten the screws securing the door handle (A) at the top and bottom of the door and remove the door handle.
2. Unfasten the screws securing the top (B) and bottom (C) hinge mounting plates and remove them.
3. Fit the bottom hinge mounting plate (C) to the top corner of the door where the door handle was removed.
4. Fit the top hinge mounting plate (B) to the bottom corner of the door where the door handle was removed.
5. Remove the door roller catch (E) and blanking plate (D) from the inside of the door and swap their positions.
6. Fit the door handle to the side where the door hinges were removed with the screws (A).

Reverse the orientation of the door's inner glass.

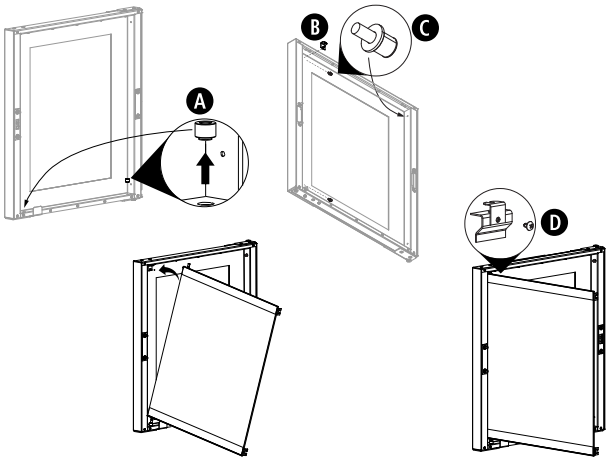

1. Remove the lower pivot spacer (A) and fit it to the hole on the opposite side.

© 2026 Moffat | 249556-6

Remove the black plastic plugs before inserting the pivot spacers and fit them into the holes where the pivot spacers were removed from.

2. Remove the two inner glass latches (B) and fit them to the opposite side of the door.
3. Remove the two inner glass latching studs (C) and fit them to the opposite side of door.
   Apply a medium-strength threadlocking adhesive (for example, Loctite 243) to secure the studs.
4. Fit the inner glass door into the pivot spacer and tilt it into the inner door frame.
5. Locate the top pivot of inner glass door into the top of the inner door and secure it in position with inner glass retaining clip (D).
6. Lift the inner glass up onto the locking catch to lock glass into position.

IMPORTANT
Ensure that the inner glass door is fitted correctly and that the glass pivots at the hinge-end of the door and not the handle end.

Remove the door catch

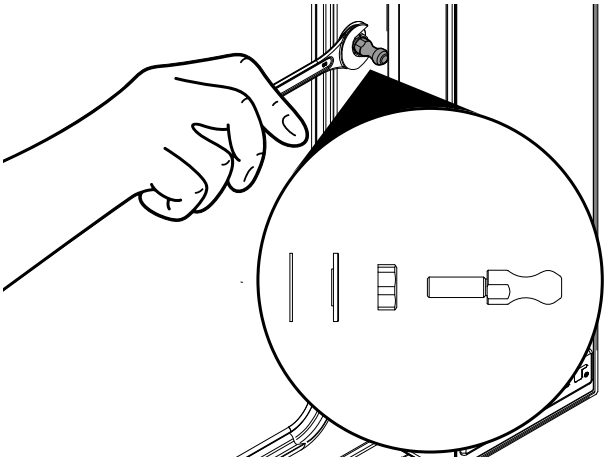

1. Unfasten the locking nut.
2. Unscrew the locking dog.
3. Remove the locking dog, locking nut, and washers.

Reverse the door catch

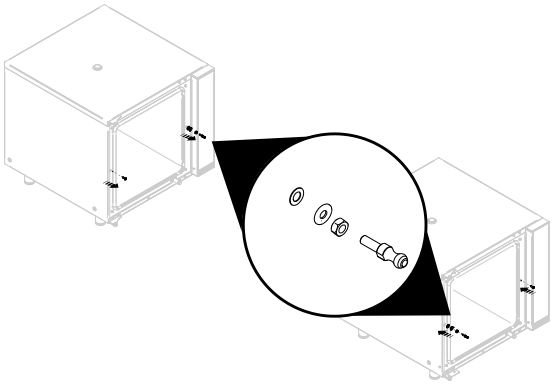

1. From the opposite side of the oven door frame, remove the centre cap screw.
2. Fit the locking dog, nut, and washer to the opposite side of the door frame. See Fit the door catch below.
3. Fit the cap screw that was removed in Step 1 to cover the slot where the door catch was removed.

Fit the door catch

1. Fit the locking dog, nut, and washer to the door frame.
   Apply a suitable metal adhesive (for example, Permabond 1042) to the threads of the locking dog.
2. Screw the locking dog into the door frame and hand-tighten it as far as it will go.
   Ensure that the fibre washer is seated against the door frame and the stepped washer is seated over the fibre washer.

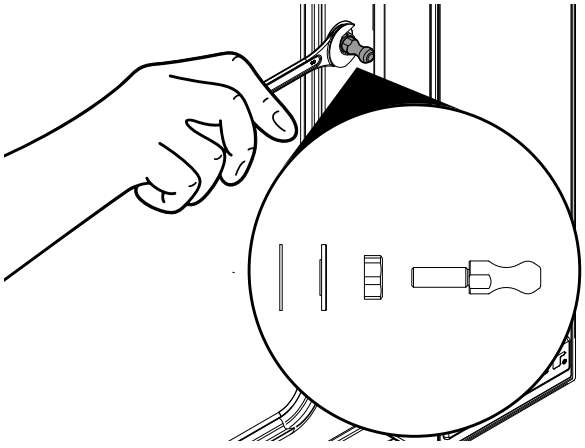

3. Slam the door shut and ensure that the door is not loosely sealed around the door frame. Adjust the locking dog if required. See Adjustment and calibration on page 14.
4. Tighten the lock nut.

5. Ensure that the door micro-switch operates correctly. See Adjustment and calibration on page 14.

Fit the reversed door to the oven

1. Fit the bottom of the door to the bottom pivot bolt.
2. Fit the top of door into the top hinge plate and secure it with the top pivot bolt.

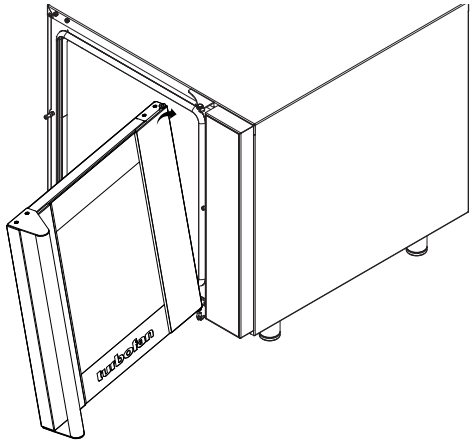

© 2026 Moffat | 249556-6

TURBOFAN CUSTOMER CARE

New Zealand
Moffat Limited
www.moffat.co.nz
Tel: +64 (3) 983 6600
Fax: +64 (3) 983 6660
Email: sales@moffat.co.nz

Canada
Serve Canada
www.servecanada.com
Sales: 800 551 8795
Service: 800 263 1455
Email: info@servecanada.com

International
Moffat Limited
www.moffat.com
Tel: +64 (3) 983 6600
Fax: +64 (3) 983 6660
Email: export@moffat.co.nz

Australia
Moffat Pty Ltd
www.moffat.com.au
Tel: +61 (03) 9518 3888
Service: 1300 264 217
Fax: +61 (03) 9518 3833
Email: vsales@moffat.com.au

United Kingdom
Blue Seal Limited
www.blue-seal.co.uk
Tel: 0121 327 5575
Service: 0121 332 6647
Fax: 0121 327 9711
Email: sales@blue-seal.co.uk

United States
Moffat Inc
www.moffat.com
Tel: 1 800 551 8795
Fax: 336 661 9546
Email: sales@moffat.com

an Ali Group Company

GROUP
the spirit of excellence